Piping base with tubes for suction side after corrections Sept08 2006
Additional variant

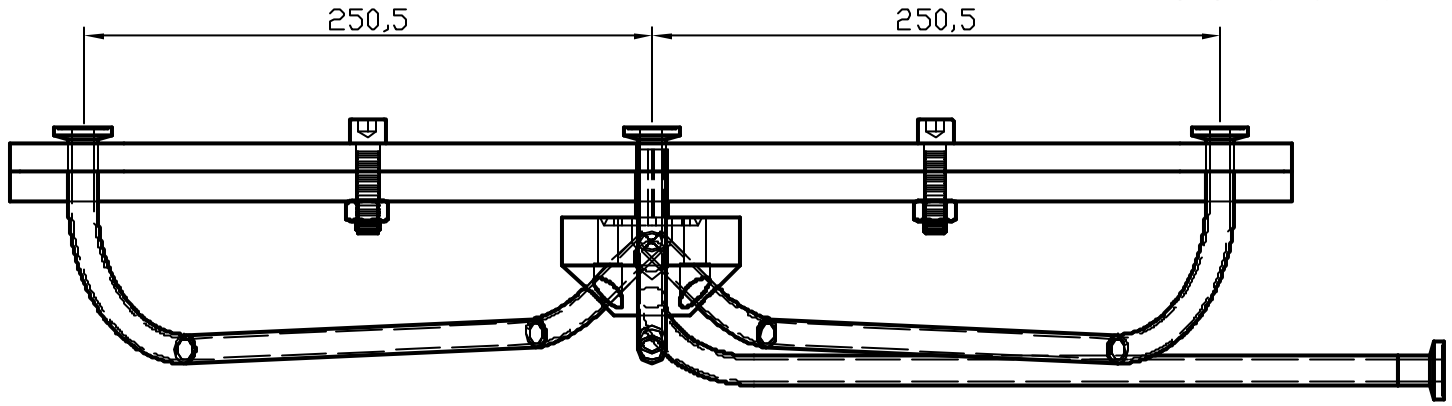

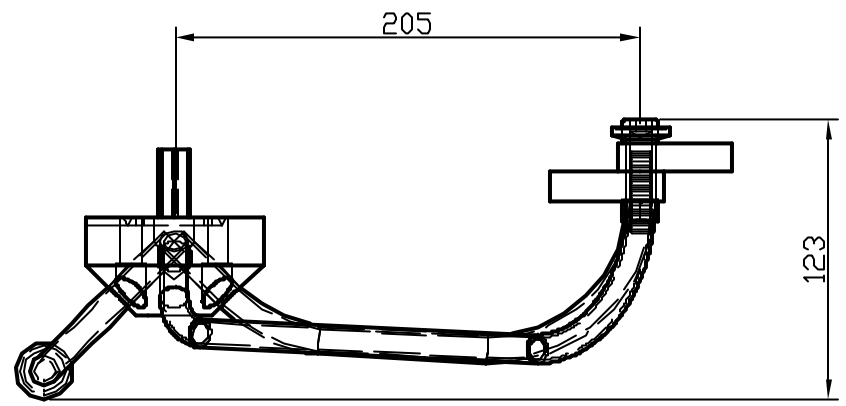

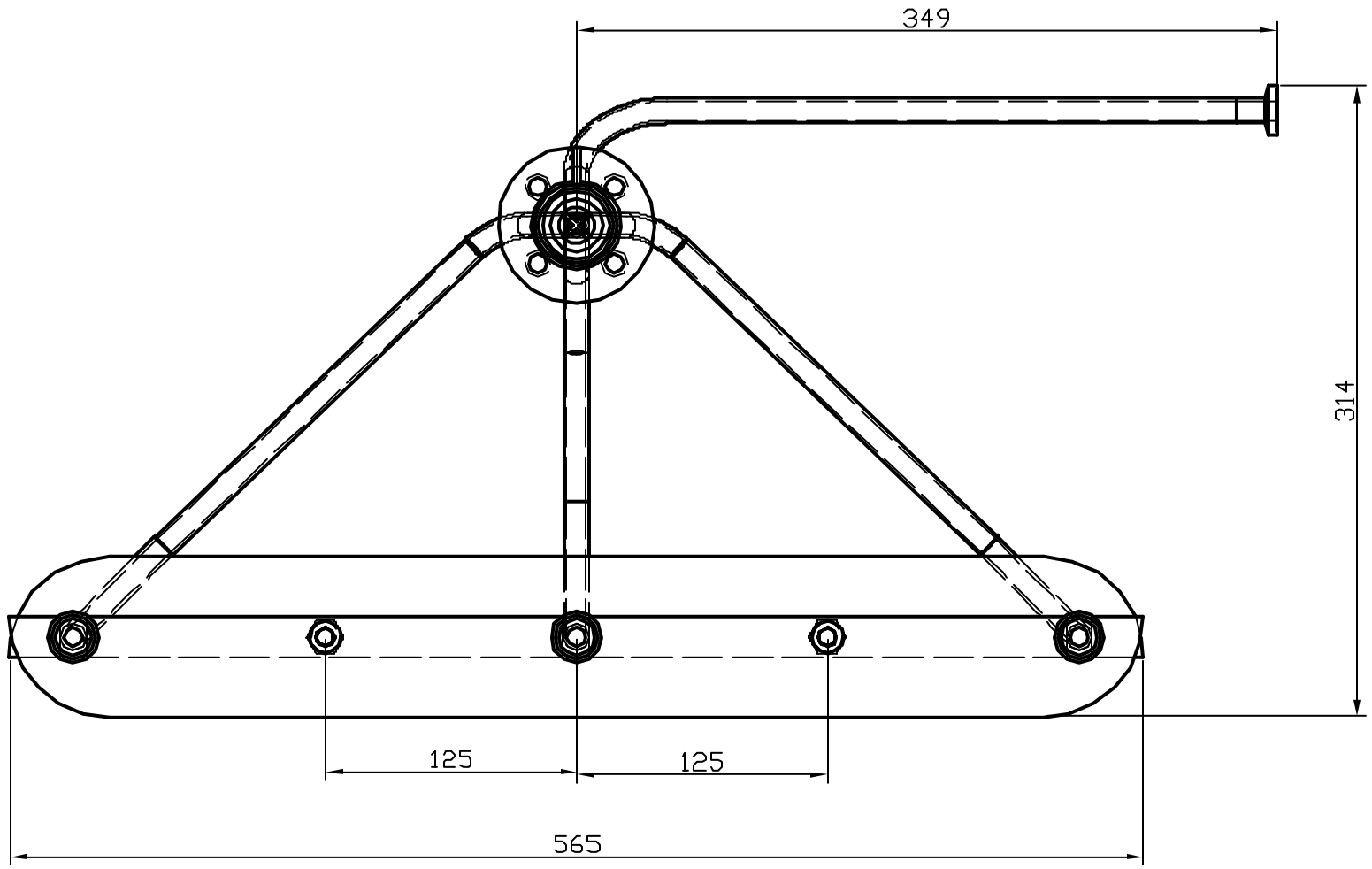

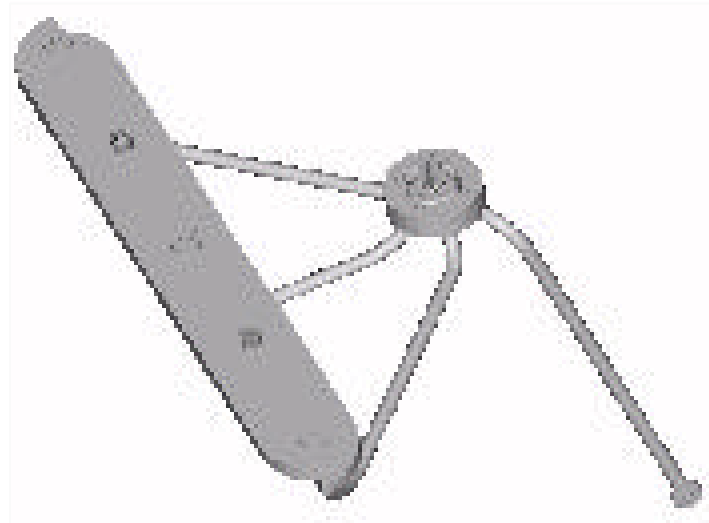

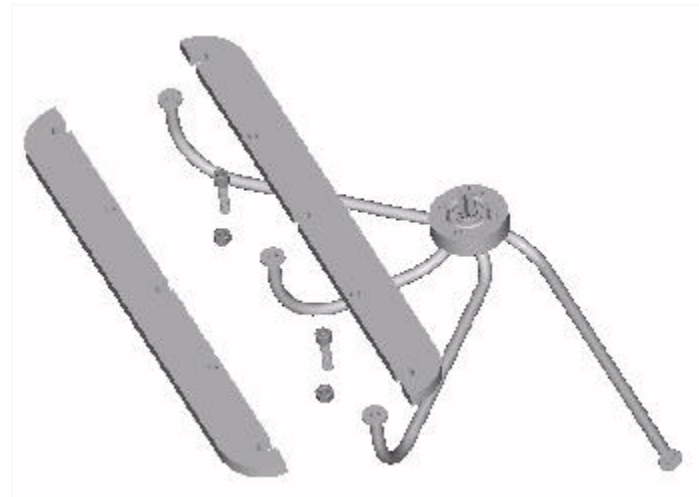

Itemref	Quantity	Title/Name, designation, material, dimension etc			Article No./Reference	
Designed by	Checked by	Approved by - date		Filename	Date	Scale
Owner PulseGuard ATG LTD.			Title/Name PB--4x0_5in plain-100Ba			
			Drawing number		Edition	Sheet

RevNo	Revision note	Date	Signature	Checked